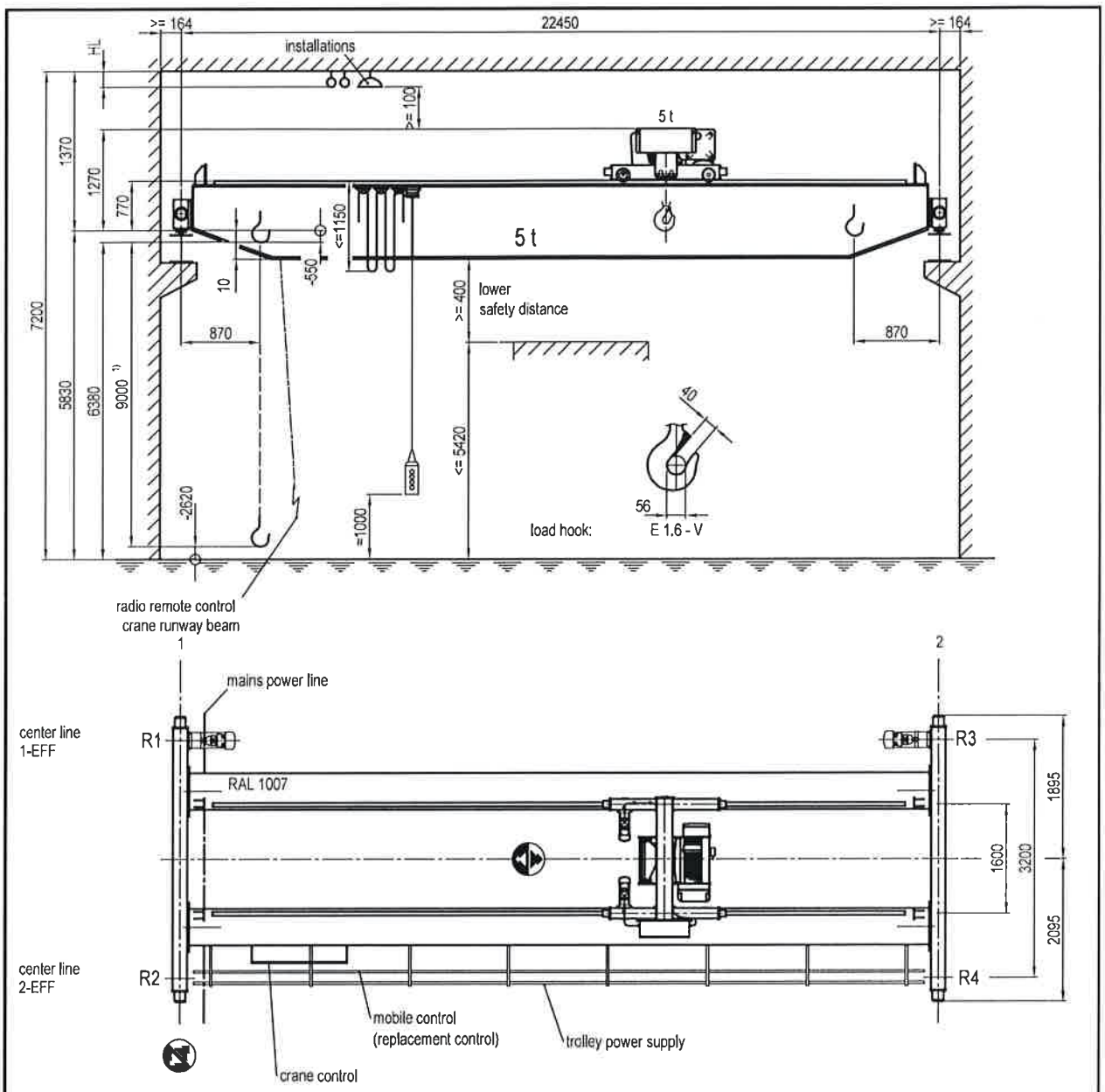

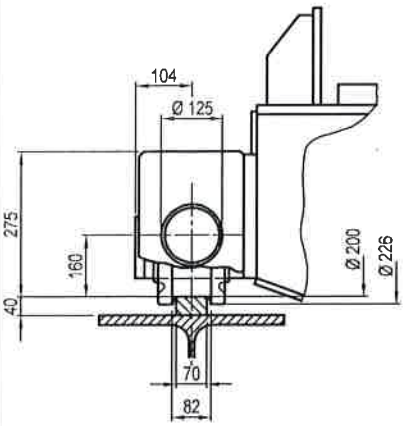

crane		ZLK 5 t x 22450 mm		
design basis		DIN 15018, H2/B3		
hoist + trolley		GM 1000.5000 H-202.41.9000.6.D 130.20		
FEM group		2m / M5		
operation location		indoor operation		
ambient conditions		-5° C up to +40° C, without special requirements		
crane travel		10 / 40 m/min		
trolley travelling		5 / 20 m/min		
hoisting		0.8 / 5 m/min		
total weight		7090 kg (thereof hoist + trolley 523 kg)		
mains voltage; admissible voltage swing		3/PE ~50 Hz 380 V (TN-S); -3% / +5%		
total power consumption		6.6 kW (starting current * cos phi: 33.8 A)		
load data	wheel loads (kN) (without vibration coefficient)	crane axis 1 (min/max)	17.2	42.1
		crane axis 2 (min/max)	17.1	42.4
	lateral loads (kN)	mass forces crane travel (min/max)	2.1	5.1
	skewing force on guide side (coefficient of frictional contact <= 0,3)		14.1	-
	horizontal loads from scewing (guide side/opposite side)	front crane axis in driving direction	4.1	10.1
		back crane axis in driving direction	0.0	0.0
	longitudinal loads (kN) (per crane runway beam)	mass forces crane travel (max.)		2.4
		collision forces (max.) (motion limiter taken into account)		20.6

1) maximum hook path of hoist 9 m, actual use according to conditions on site

ABUS Kransysteme GmbH
Sonnenweg 1
51647 Gummersbach
phone +49 2261 37-249
fax +49 2261 37-90204

crane ZLK

order:
16631545 / 2

person in charge: Bringmann,F.
Date: 20/04/2015

© ABUS Kransysteme GmbH dreisewe0204_20150512_10160681_B

61